MACHINE THEORY
Bachelor in Mechanical Engineering

GEAR TRAINS

David Mauricio Alba Lucero
José Luis Pérez Díaz
Ignacio Valiente Blanco
Efrén Díez Jiménez

Universidad
Carlos III de Madrid

Objectives

- Learn how simple and composed gear trains work.
- Learn how to design epicyclic gear trains works.
- Identify the advantages and disadvantages of both systems.
- Determine efficiency of gear trains

Simple gear trains

- The objective of gear trains is to transform motion by adapting velocity, torque and direction of movement.

$$v_{p2} = v_{p3}$$

$$\omega_2 r_2 = \omega_3 r_3$$

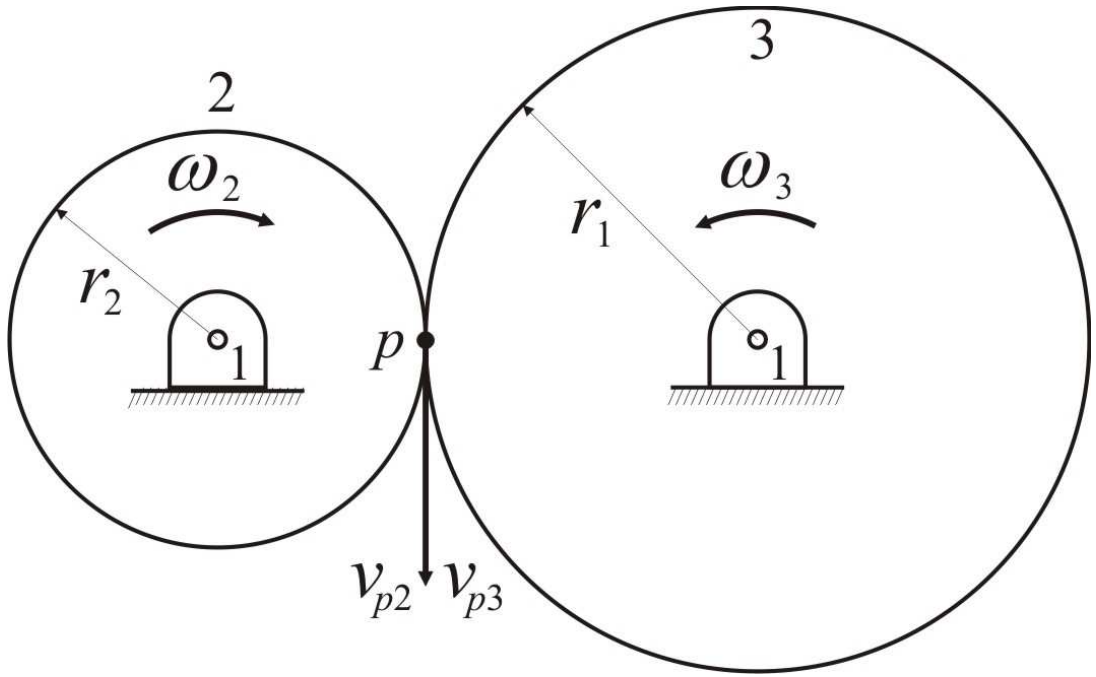

Simple gear trains

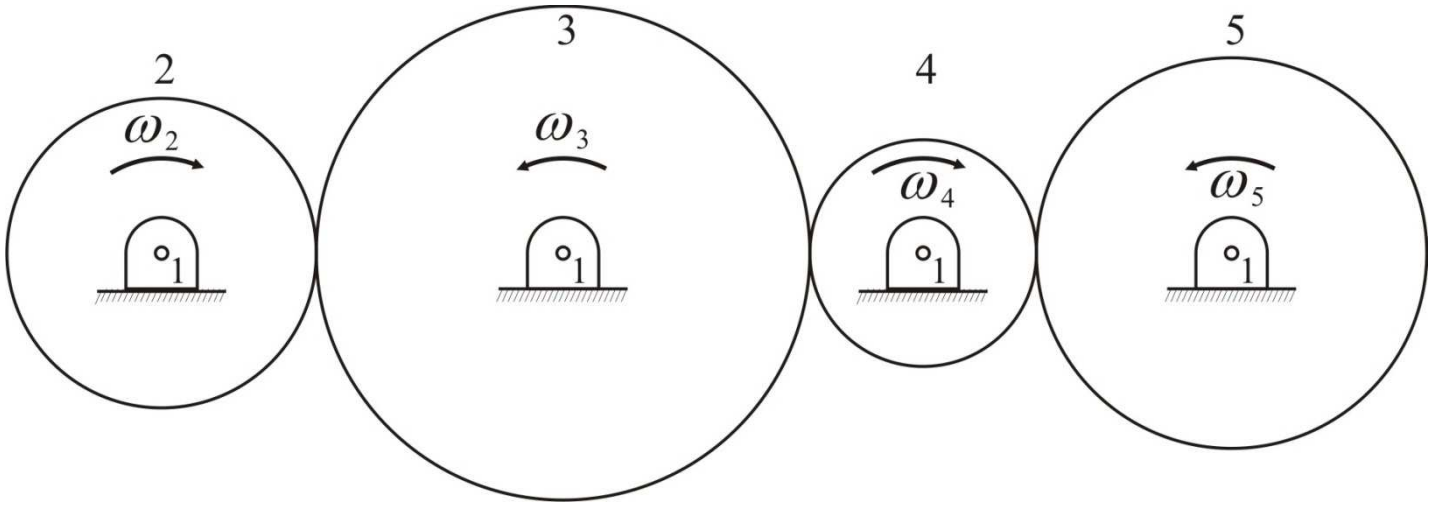

What if we need higher transmission ratios?

- The solution is to couple several simple gear trains.

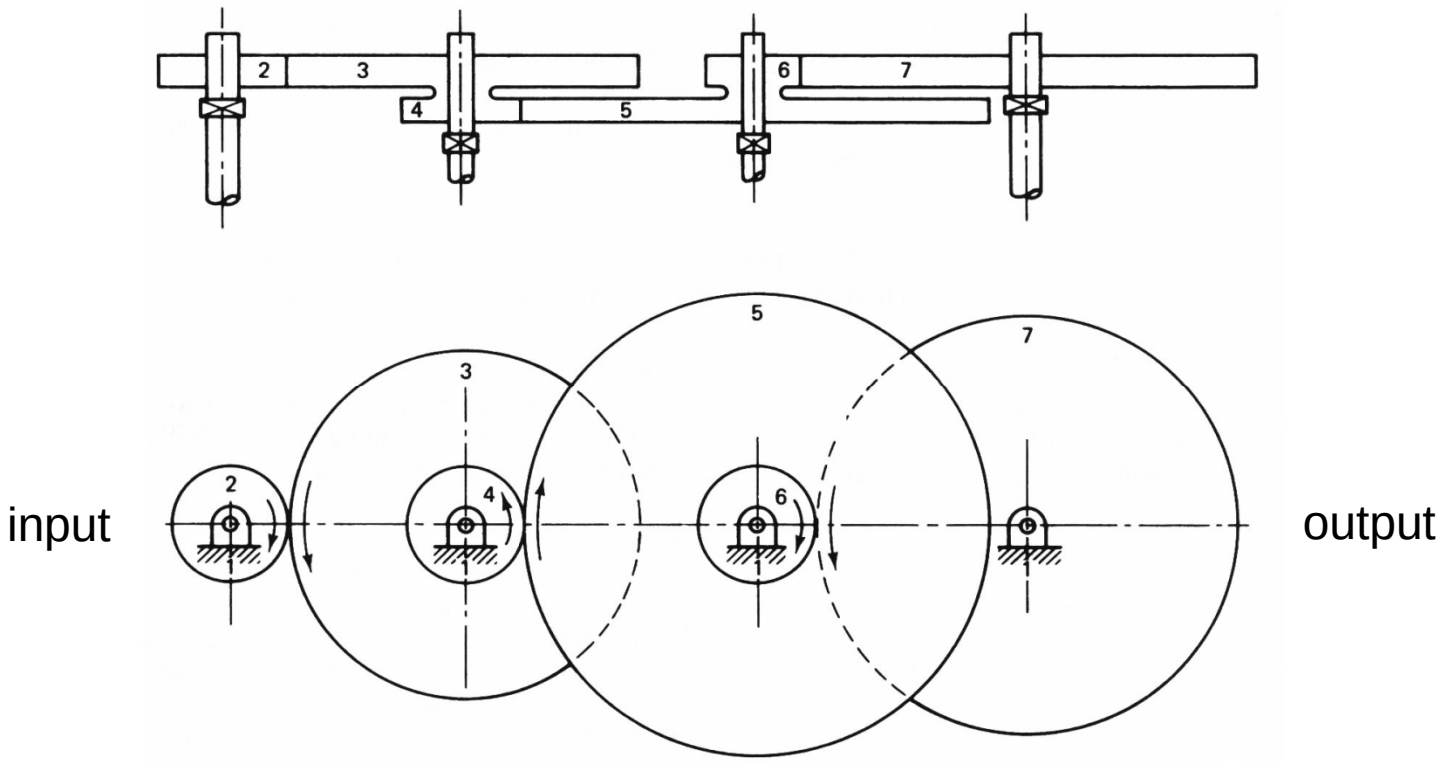

Planetary gear trains

Also called epicyclic gear trains

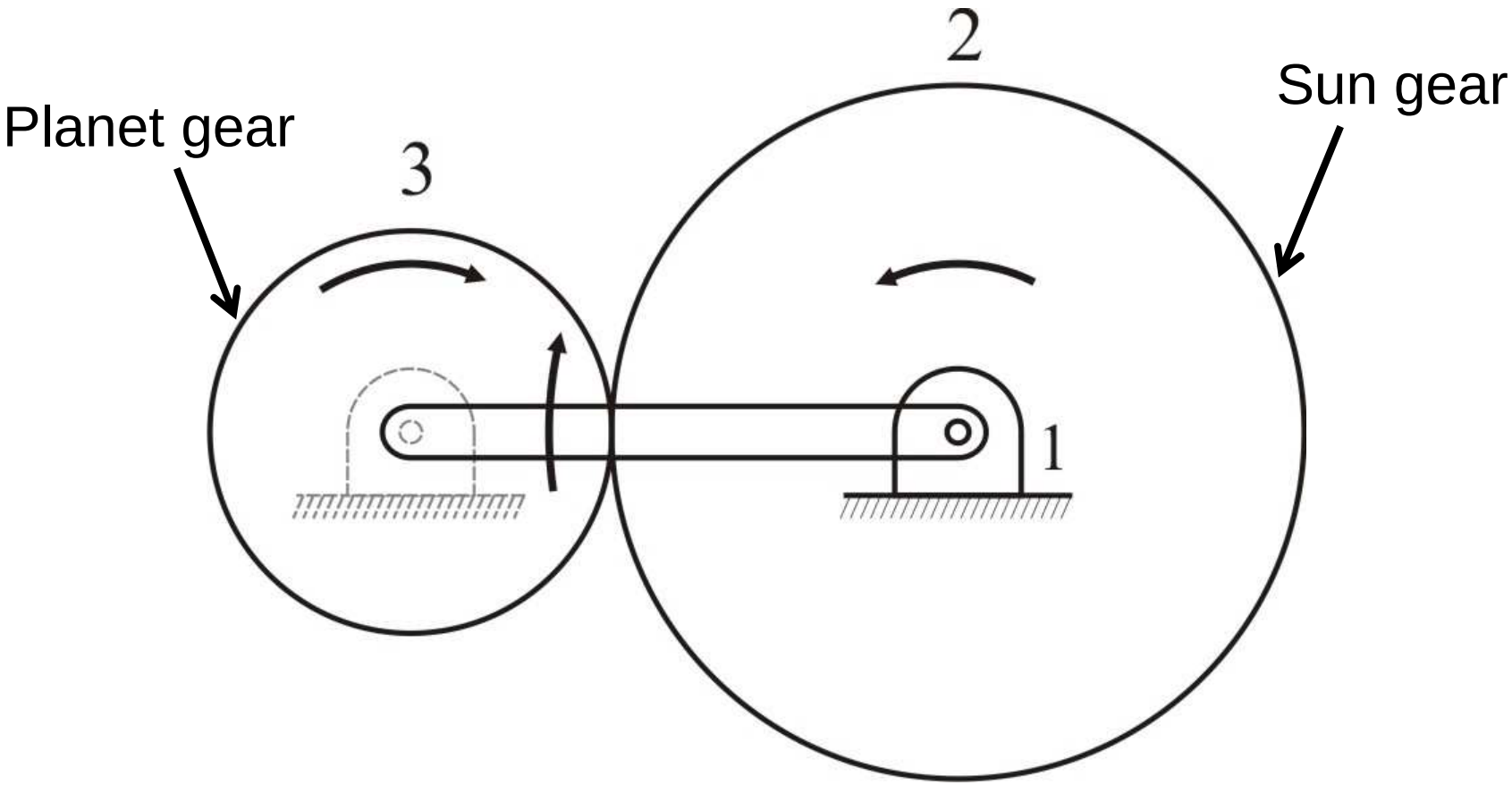

Angular velocity of the planet gear with respect to the GROUND

$$\omega_{31} r_3 = \omega_{41}(r_3 + r_2)$$

$$\omega_{31} = \frac{\omega_{41}(r_3 + r_2)}{r_3}$$

$$\omega_{31} = \omega_{41} + \omega_{41}\frac{r_2}{r_3}$$

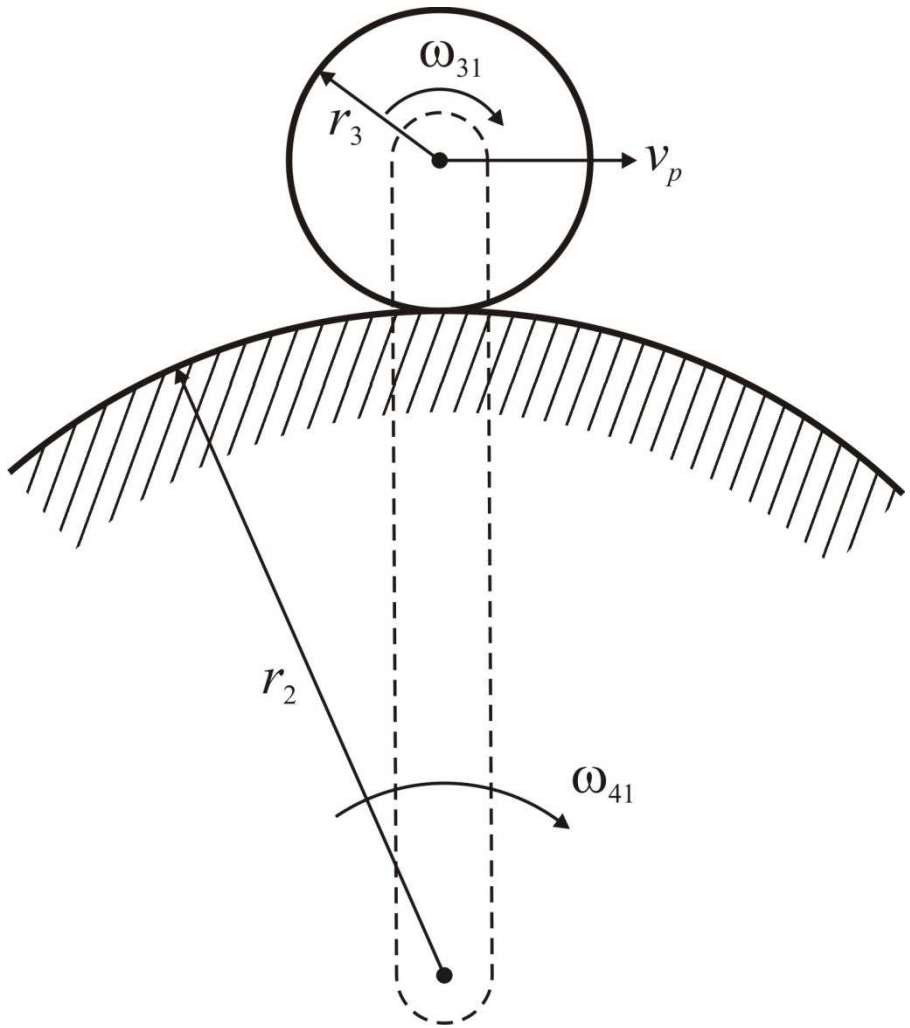

Angular velocity of the planet gear with respect to the ARM

$$r_3\theta_{34} = r_2\theta_{41}$$

$$r_3\omega_{34} = r_2\omega_{41}$$

$$\omega_{34} = \frac{r_2}{r_3}\omega_{41}$$

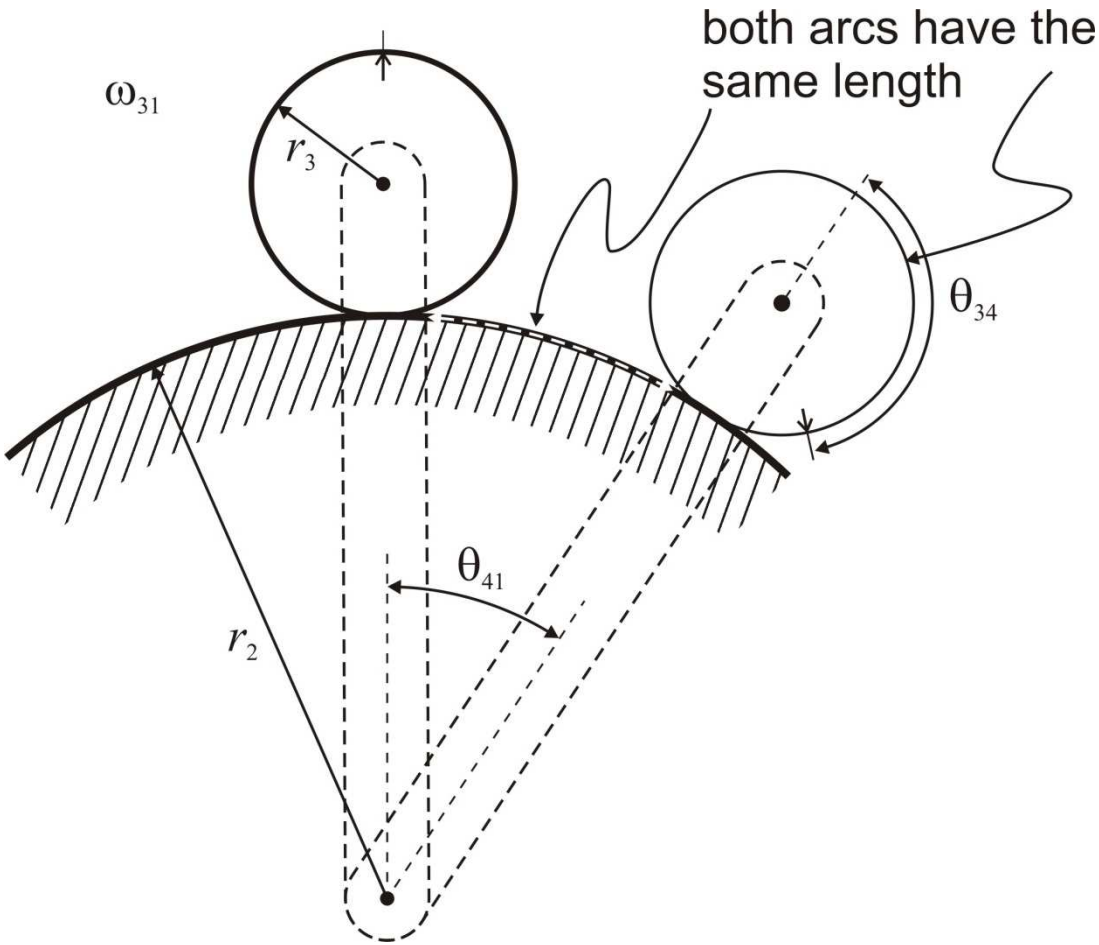

Both results are related!

$$\omega_{31} = \omega_{41} + \omega_{41}\frac{r_2}{r_3}$$

$$\omega_{34} = \frac{r_2}{r_3}\omega_{41}$$

$$\omega_{31} = \omega_{41} + \omega_{34}$$

Do you remember this?

$$v_A = v_B + v_{A/B}$$

Planetary gear trains

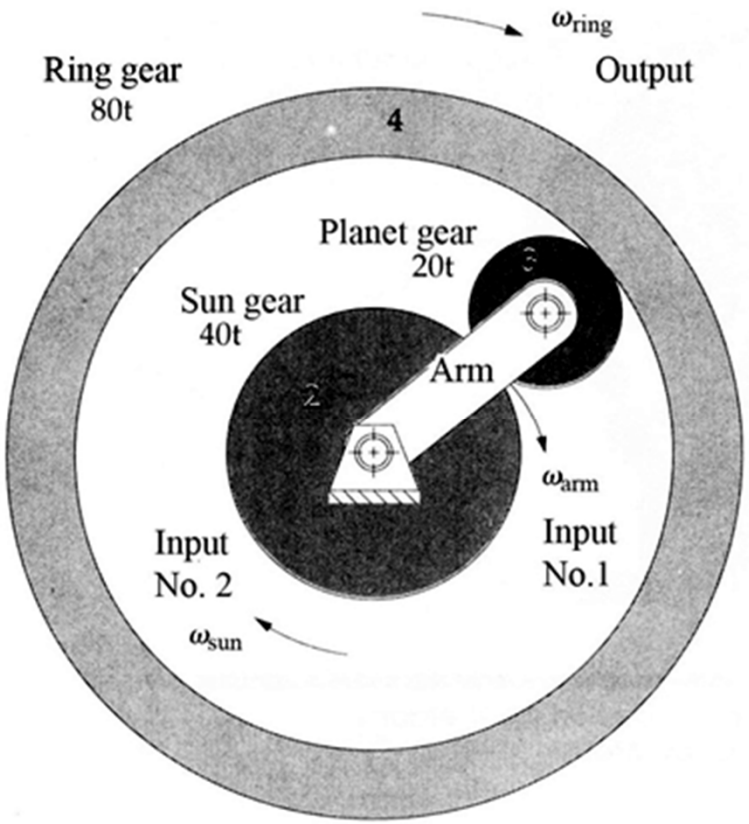

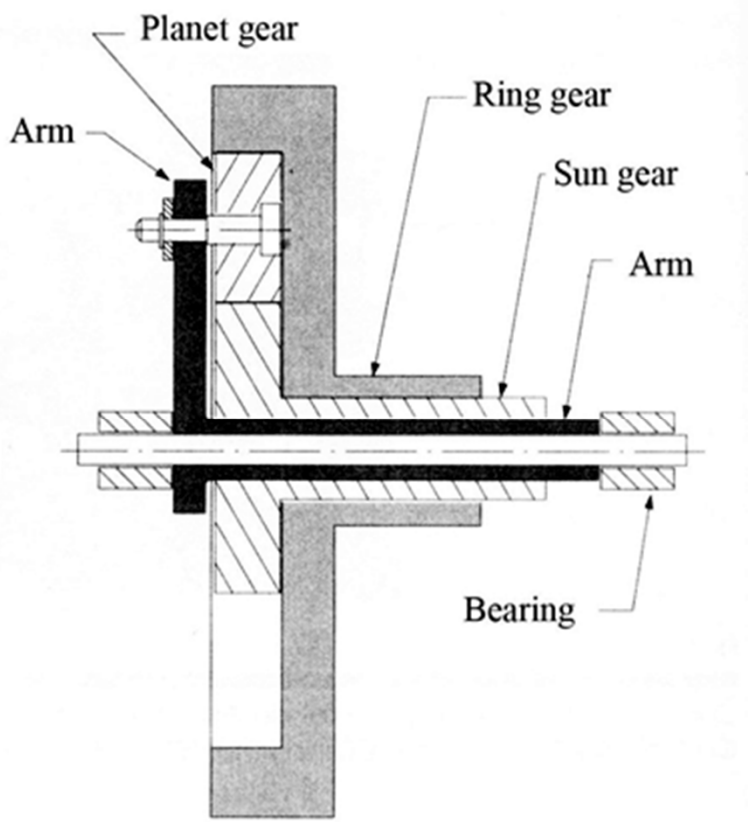

Sun gear	N_2 = 40 tooth	
Planet gear	N_3 = 20 tooth	ω_{arm} = 200rpm(CW)
Ring gear	N_4 = 80 tooth	ω_{sun} = 100rmp(CW)

Planetary gear trains

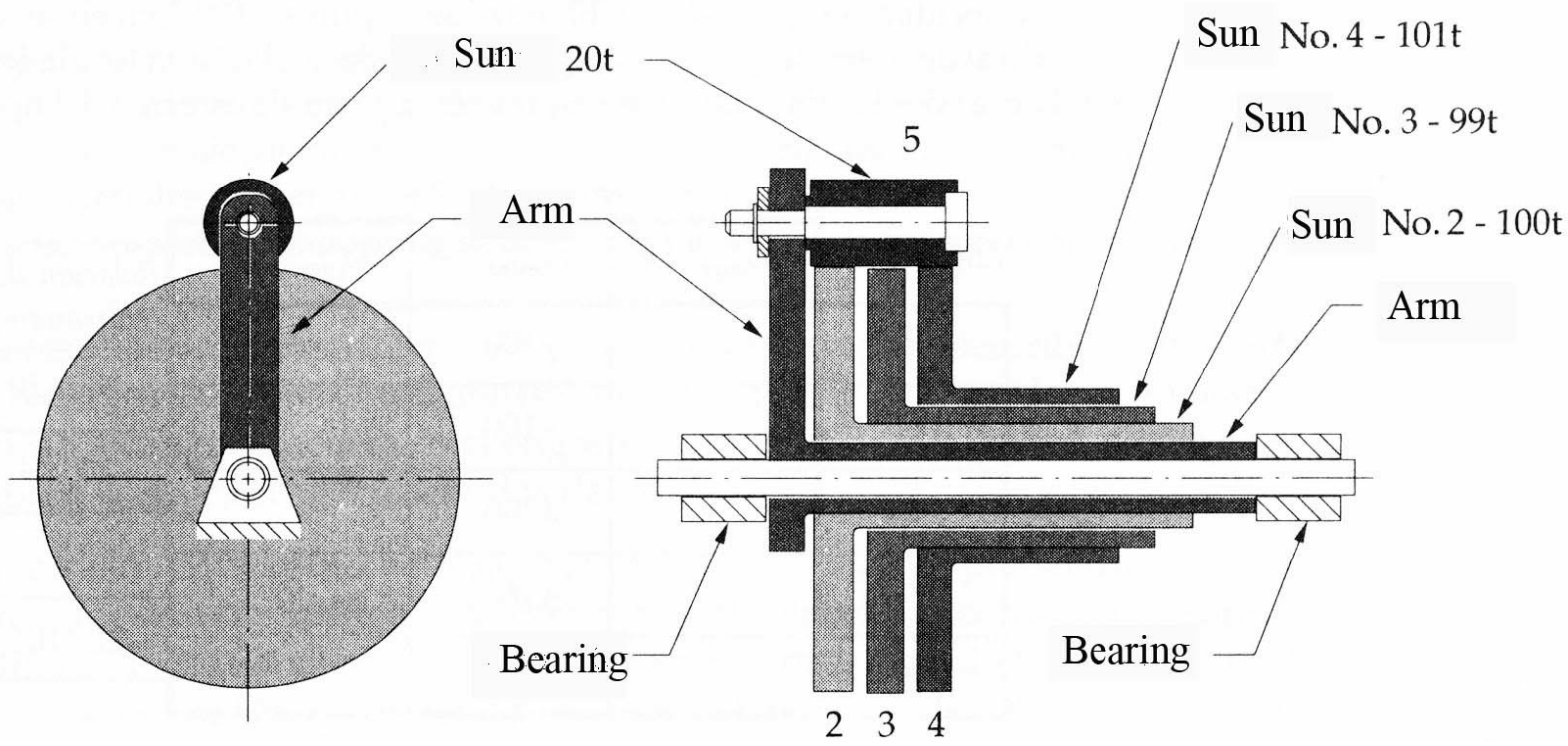

ω_{arm} = 100rpm(CCW)
ω_{sun2} = 0rpm

Formula method

$$\omega_{FA} = \omega_F - \omega_A$$

$$\omega_{LA} = \omega_L - \omega_A$$

$$\frac{\omega_{LA}}{\omega_{FA}} = \frac{\omega_L - \omega_A}{\omega_F - \omega_A} = \pm \frac{\text{product of number of teeth on driver gears}}{\text{product of number of teeth on driven gears}} = R$$

Formula method

- Only accepts variables that are the inputs of the DOF of the train.
- The chosen gears to be the first and the last cannot be orbiting.
- First and last gear should be connected by a path or meshes.

Some words about efficency

Case	ρ	Fixed Shaft	Input Shaft	Train Ratio	T_1	T_2	T_{arm}	Efficiency (η)
1	$>+1$	2	1	$1-\rho$	$-\frac{T_{arm}}{1-\rho E_0}$	$\frac{\rho E_0 T_{arm}}{1-\rho E_0}$	T_{arm}	$\frac{\rho E_0 - 1}{\rho - 1}$
2	$>+1$	2	arm	$\frac{1}{1-\rho}$	T_1	$-\rho\frac{T_1}{E_0}$	$\left(\frac{\rho - E_0}{E_0}\right)T_1$	$\frac{E_0(\rho-1)}{\rho - E_0}$
3	$>+1$	1	2	$\frac{\rho-1}{\rho}$	$\frac{T_{arm}}{\rho E_0 - 1}$	$-\frac{\rho E_0 T_{arm}}{\rho E_0 - 1}$	T_{arm}	$\frac{\rho E_0 - 1}{E_0(\rho-1)}$
4	$>+1$	1	arm	$\frac{\rho}{\rho-1}$	$-\frac{E_0}{\rho}T_2$	T_2	$-\left(\frac{\rho - E_0}{\rho}\right)T_2$	$\frac{\rho-1}{\rho - E_0}$
5	≤ -1	2	1	$1-\rho$	$-\frac{T_{arm}}{1-\rho E_0}$	$\frac{\rho E_0 T_{arm}}{1-\rho E_0}$	T_{arm}	$\frac{\rho E_0 - 1}{\rho - 1}$
6	≤ -1	2	arm	$\frac{1}{1-\rho}$	T_1	$-\rho\frac{T_1}{E_0}$	$\left(\frac{\rho - E_0}{E_0}\right)T_1$	$\frac{E_0(\rho-1)}{\rho - E_0}$
7	≤ -1	1	2	$\frac{\rho-1}{\rho}$	$\frac{E_0 T_{arm}}{\rho - E_0}$	$-\frac{\rho T_{arm}}{\rho - E_0}$	T_{arm}	$\frac{\rho - E_0}{\rho - 1}$
8	≤ -1	1	arm	$\frac{\rho}{\rho-1}$	$-\frac{T_2}{\rho E_0}$	T_2	$-\left(\frac{\rho E_0 - 1}{\rho E_0}\right)T_2$	$\frac{E_0(\rho-1)}{\rho E_0 - 1}$

Efficiency of a train

Find the overall efficiency of the epicyclic train shown in Figure 9-42.[5] The basic efficiency E_0 is 0.9928 and the gear tooth numbers are: N_A= 82t, N_B = 84t, N_C = 86t, N_D = 82t, N_E = 82t, and N_F = 84t. Gear *A* (*shaft* 2) is fixed to the frame, providing a zero velocity input. The arm is driven as the second input.

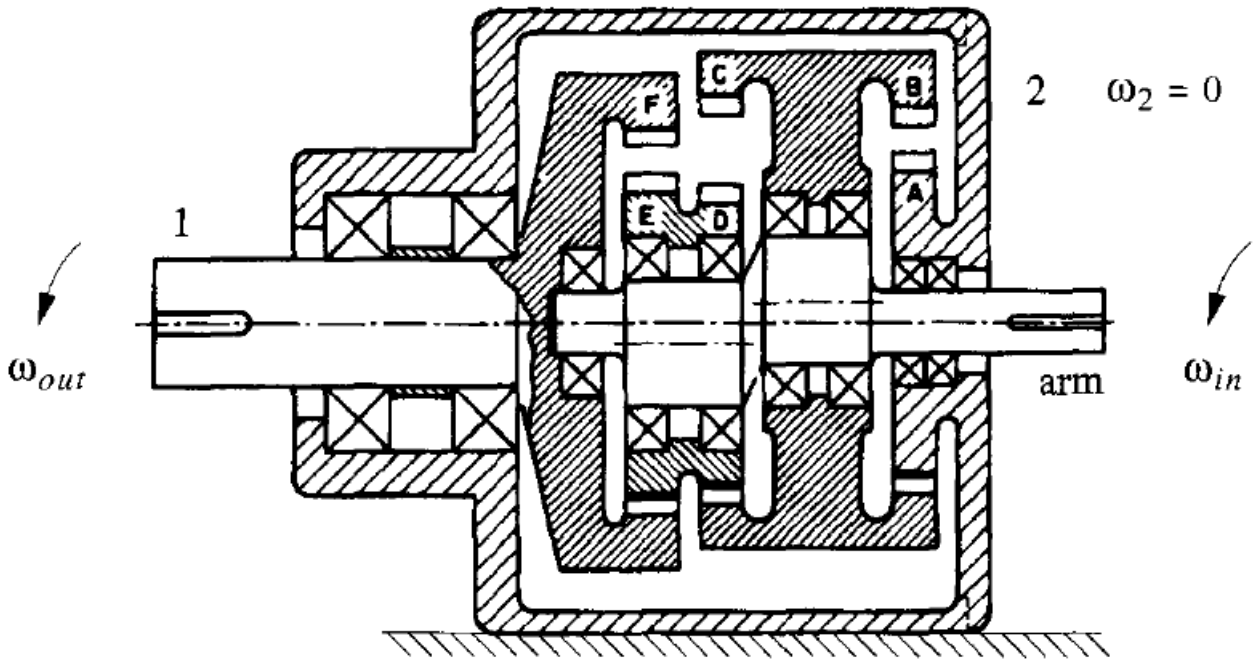

References

- Robert L. Norton. Diseño de Maquinaria. Ed.Mc Graw Hill 1995.
- Erdman, A.G., Sandor, G.N. and Sridar Kota Mechanism
- http://www.youtube.com/watch?v=K4JhruinbWc