Universidad
Carlos III de Madrid
www.uc3m.es

Aerospace Structures

Chapter 1.
Structural description of the aircraft

Structures in the aeronautical sector

Authors: Enrique Barbero Pozuelo, José Fernández Sáez, Carlos Santiuste Romero

BY NC SA

Index

CHAPTER 1. Structural description of the aircraft

Structures in the aeronautical sector

- Introduction
- Truss structures
- Frame structures
- Lattice structures
- References

Authors: Enrique Barbero Pozuelo, José Fernández Sáez, Carlos Santiuste Romero

CC BY NC SA

❑ Strength of Materials

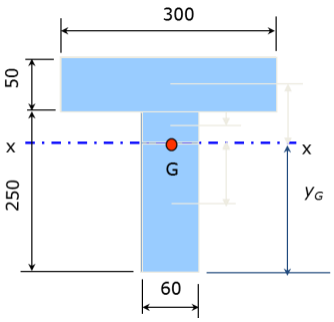

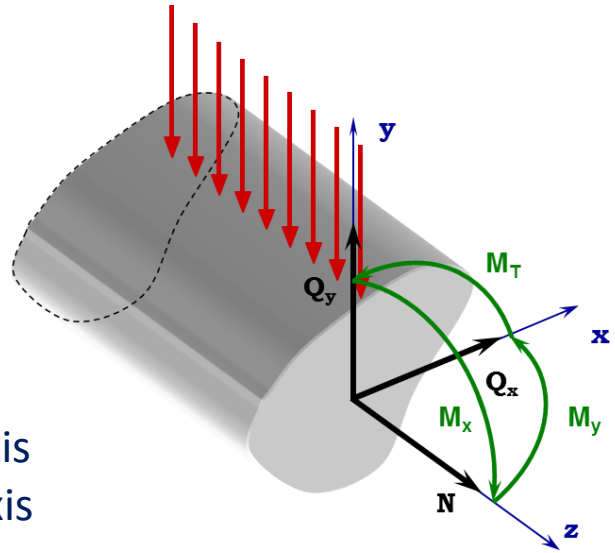

$$\frac{du_z^o(z)}{dz} = \frac{N}{EA}$$
$$\frac{d\theta_x(z)}{dz} = \frac{M_x}{EI_x}$$
$$\frac{d\theta_y(z)}{dz} = \frac{M_x}{EI_y}$$

EA: Axial stiffness
EIx: Bending stiffness around x axis
EIy: Bending stiffness around y axis

$$\sigma_{zz}(x,y,z) = \frac{N}{A} + \frac{y \cdot M_x}{I_x} - \frac{x \cdot M_y}{I_y}$$

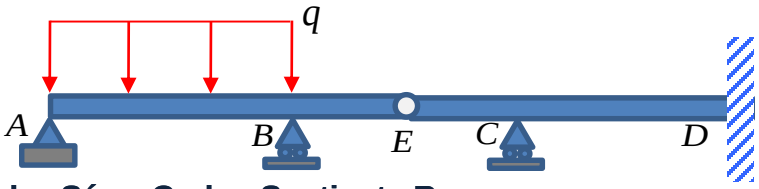

Authors: Enrique Barbero Pozuelo, José Fernández Sáez, Carlos Santiuste Romero

CC BY NC SA

❑ Airport and hangar structures

Examples of truss/beam structures

https://commons.wikimedia.org/wiki/File:Shenzhen-airport-terminal.JPG?uselang=es

Shenzhen-airport-terminal

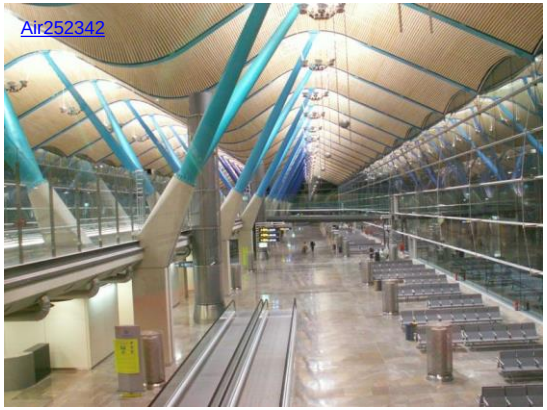

https://commons.wikimedia.org/wiki/File:Barajas_interior2.jpg?uselang=es

Terminal 4 Madrid Airport

https://upload.wikimedia.org/wikipedia/commons/2/21/US_Navy_030302-A-8380W-003_Seabees_build_hangar.jpg

Hangar structures

https://commons.wikimedia.org/wiki/Category:Hangars#/media/File:Hangaretes_do_Projeto_32_-_Foto_Set_2014.jpg

Authors: Enrique Barbero Pozuelo, José Fernández Sáez, Carlos Santiuste Romero

BY NC SA

❑ Beam structures in aircrafts

Examples of truss/beam structures

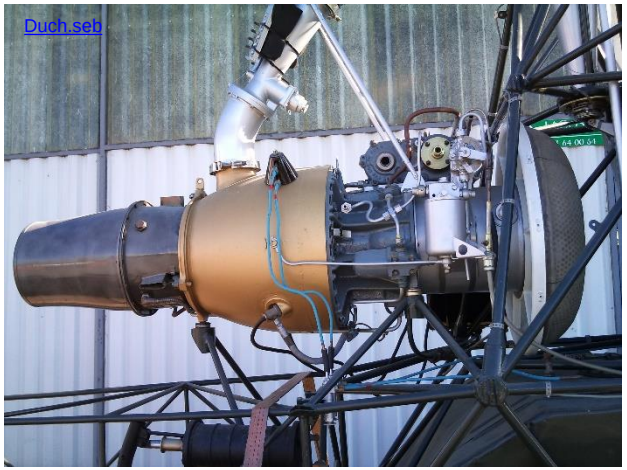

https://upload.wikimedia.org/wikipedia/commons/c/c0/Turbomeca_Palouste_%28MAA%29.JPG?uselang=es

Engine mount structure

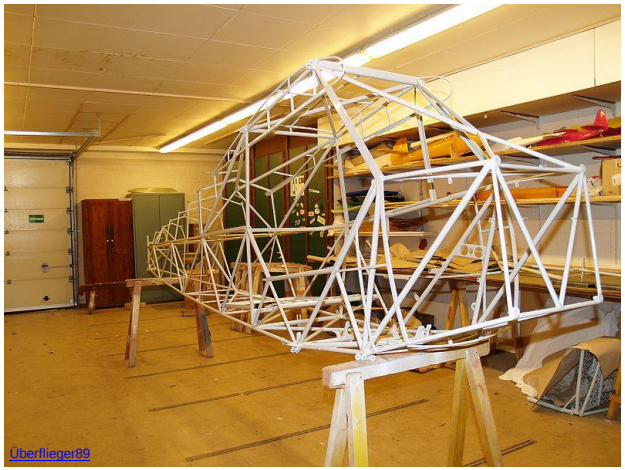

http://commons.wikimedia.org/wiki/File:Fuselage_Piper_PA18.JPG

Truss structure fuselage

Landing gear structure

https://upload.wikimedia.org/wikipedia/commons/3/3d/A320-main-landing-gear.jpg?uselang=es

Authors: Enrique Barbero Pozuelo, José Fernández Sáez, Carlos Santiuste Romero

CC BY NC SA

❑ Definition: Hinged structures

The joints between bars allow relative rotation about an axis perpendicular to the plane of the structure.

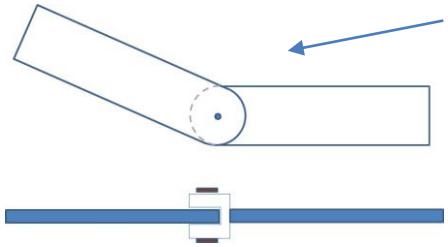

2D or 3D joints

https://upload.wikimedia.org/wikipedia/commons/7/7f/Terminal_%285791945861%29.jpg

Fukuoka Airport - International Terminal

https://upload.wikimedia.org/wikipedia/commons/7/74/T5_Trusses_4.jpg

https://upload.wikimedia.org/wikipedia/commons/7/75/London_Heathrow_T5_AB2.JPG

London Heathrow Terminal 5

Authors: Enrique Barbero Pozuelo, José Fernández Sáez, Carlos Santiuste Romero

CC BY NC SA

❑ Definition

https://commons.wikimedia.org/wiki/File:THROUGH_TRUSS_VERTICAL-DIAGONAL_INTERSECTION_DETAIL_-_Richmond_Bridge,_US_90A_at_Brazos_River,_Richmond,_Fort_Bend_County,_TX_HAER_TEX,79-RICH,2-25.tif?uselang=es

Richmond Bridge

Thin plate joint

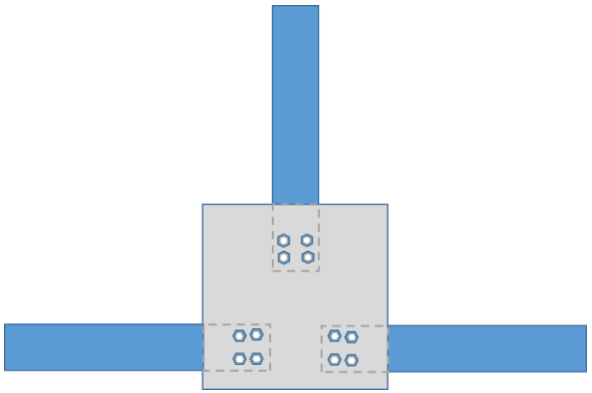

The joint can be done by screws, rivets or welding.

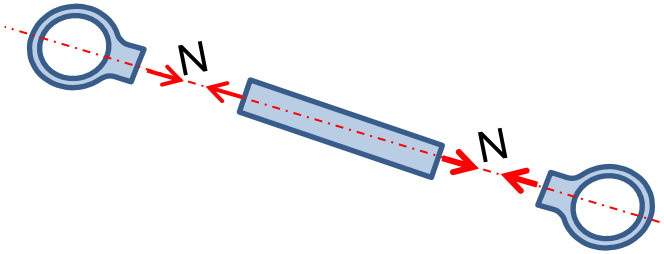

Only axial forces appear in the bars

Authors: Enrique Barbero Pozuelo, José Fernández Sáez, Carlos Santiuste Romero

CC BY NC SA

Definition

- The structure must be stiff and avoid the collapse under the application of loads.

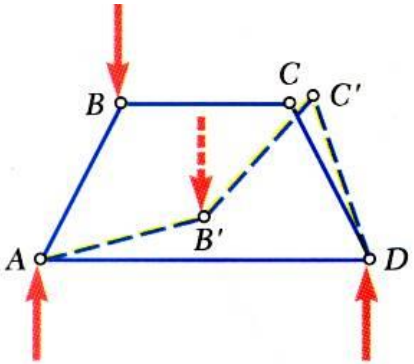

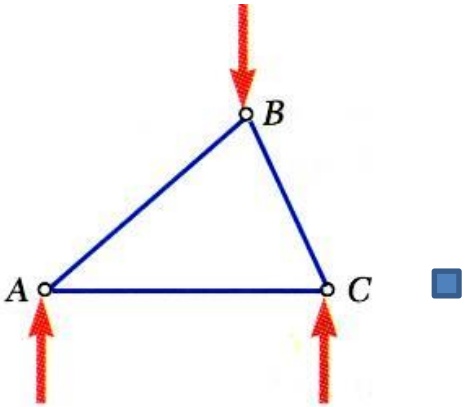

- The simplest stable structure is the triangle.
- Stable structures can be design adding two bars and one node.

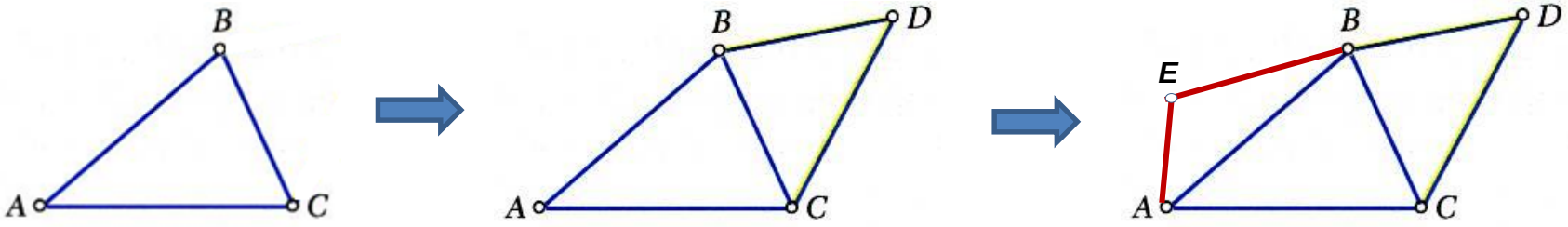

Authors: Enrique Barbero Pozuelo, José Fernández Sáez, Carlos Santiuste Romero

CC BY NC SA

Internal forces

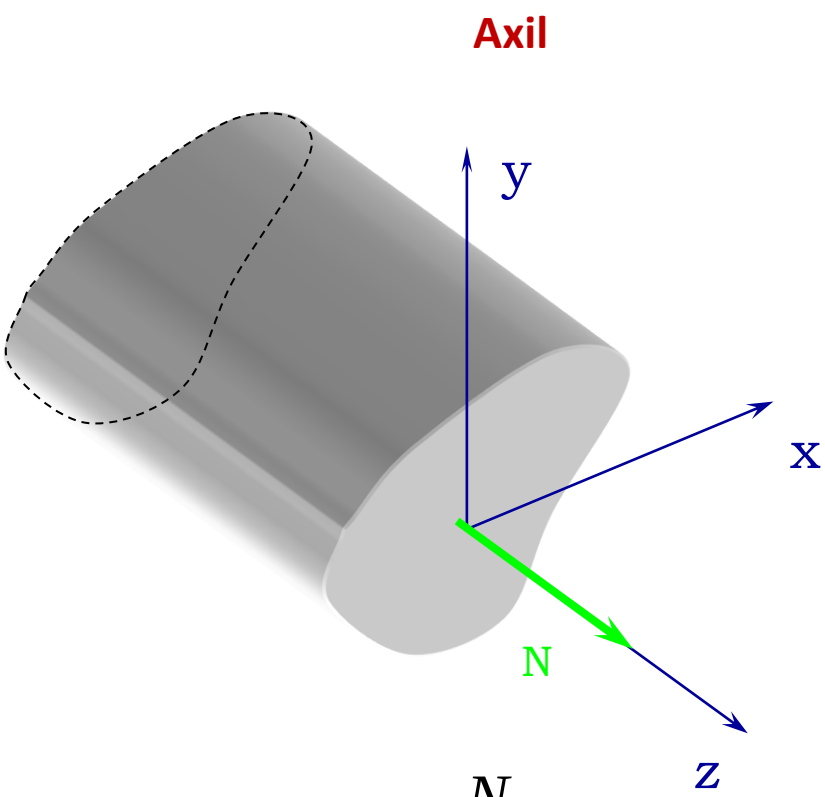

$$\sigma_z = \frac{N}{A}$$

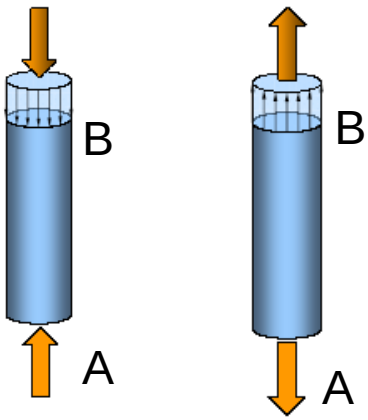

$$w^B - w^A = \int_A^B \frac{N}{EA}\,dz$$

Axial members are used to carry extensional or compressive loads applied in the direction of the axial direction of the member

Authors: Enrique Barbero Pozuelo, José Fernández Sáez, Carlos Santiuste Romero

CC BY NC SA

❑ Analysis of truss structures: Example

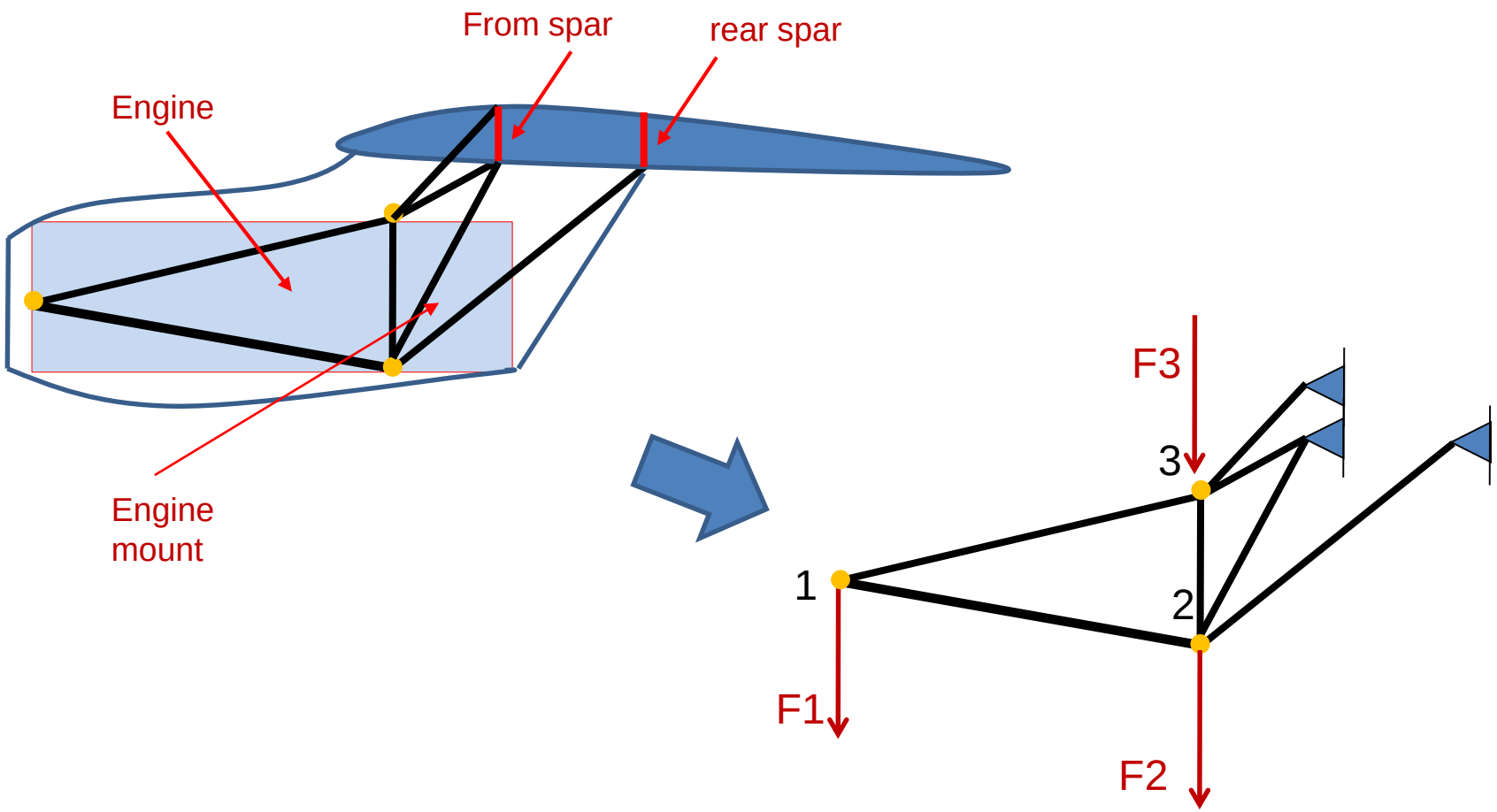

Authors: Enrique Barbero Pozuelo, José Fernández Sáez, Carlos Santiuste Romero

CC BY NC SA

❑ Analysis of truss structures: Example

The axial forces in the bars can be calculated by equilibrium forces in each of the nodes of the structure and supports (in statically determinate structures)

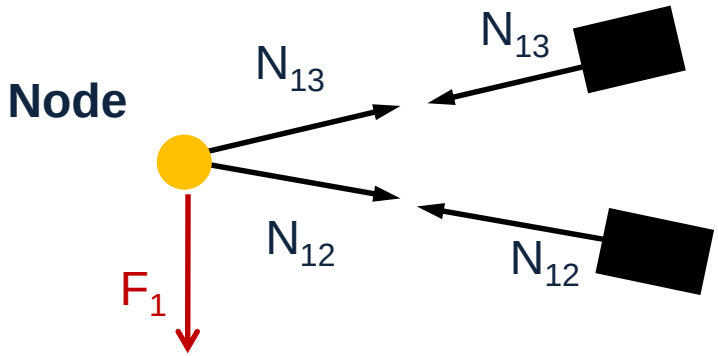

$$\sum F_H = 0$$

$$\sum F_V = 0$$

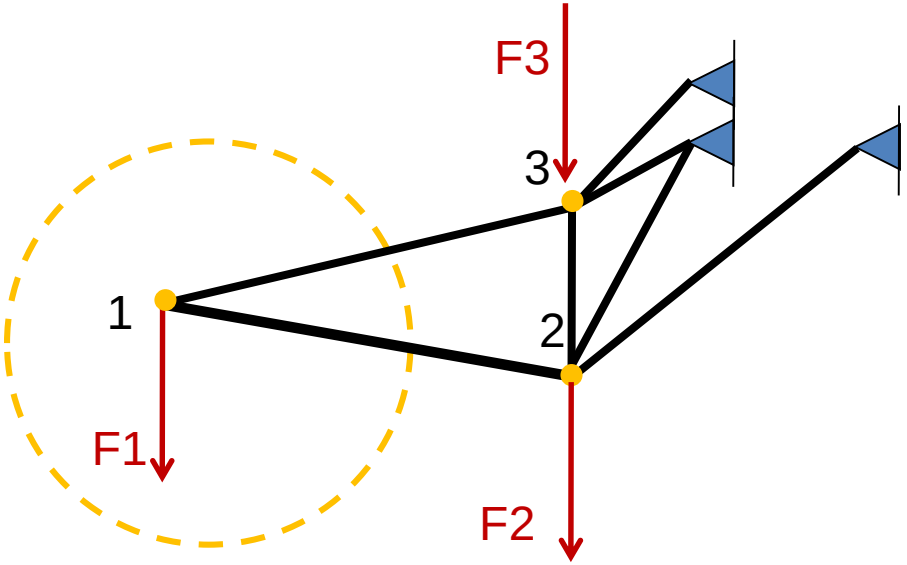

Authors: Enrique Barbero Pozuelo, José Fernández Sáez, Carlos Santiuste Romero

CC BY NC SA

❑ Definition

A frame is a structure having the bars joined via fixed joints

Each bar is subjected to internal axial forces, internal shear forces and bending moments

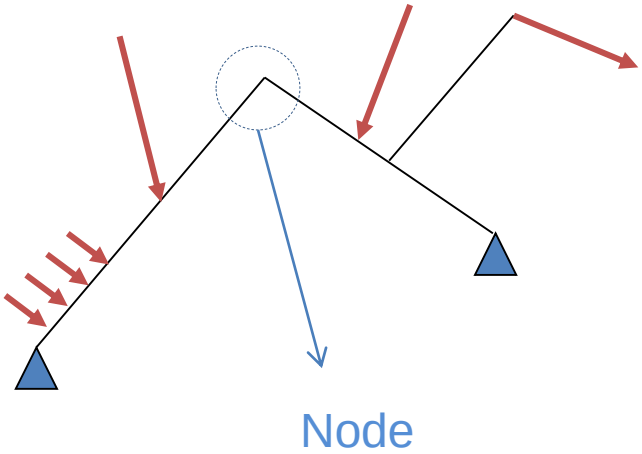

https://www.flickr.com/photos/elycefeliz/6489247171/in/photolist-aTr66V-9o8VGk-9NEwpU-dFgHej-rp8qXm-9NGKrb-8f4Htd-nKV2Yb-nKXpv6-5oCDR6-opWwJy-ebwmMy-oKSEUg-oEpw9U-8T9tUk-bzbKEW-3pFFhR-jEfb7X-9UmsB9-7rwjBL-e6BEva-jEhbsL-9NDZCz-e79FUE-6det9Z-p9zZLq-oxm5b2-cBUevf-kaZNV8-pJrjtK-9NH11D-e4wfhJ-oPP4Zy-oqAqRA-fzbsUG-s9moow-e6UeVm-opWKGB-fzbqZ5-23wkna-fyWbf6-hvwFV4-699PPa-42GH8K-6NyHgr-9NyoX4-dcPcKf-9NDtMv-a3W2c4-oXi8v1

Authors: Enrique Barbero Pozuelo, José Fernández Sáez, Carlos Santiuste Romero

BY NC SA

❑ Definition

A frame is a structure having the bars joined via fixed joints

Each bar will be subjected to internal axial forces, internal shear forces and bending moments

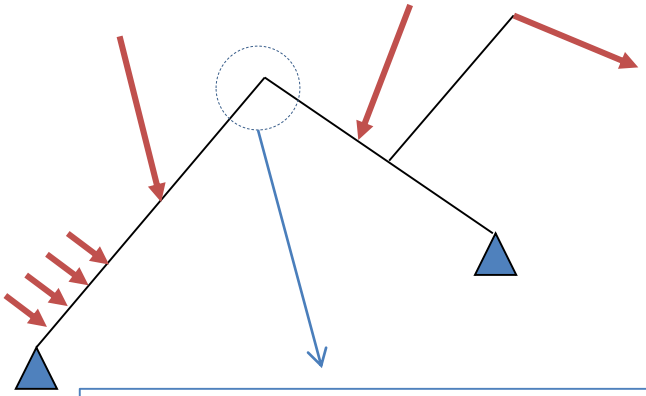

The nodes will have equilibrium under the influence of internal axial forces, internal shear forces, bending moments and eventual external loads which may act on the structure

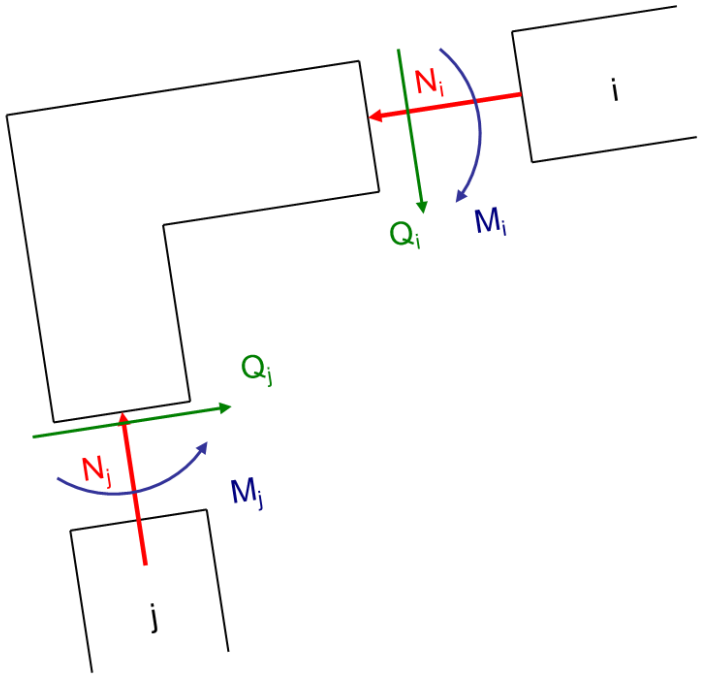

Authors: Enrique Barbero Pozuelo, José Fernández Sáez, Carlos Santiuste Romero

CC BY NC SA

❑ Non-traslational frames

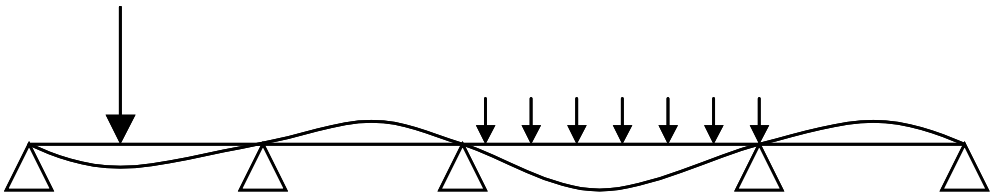

The nodes of a non-translational structure does not move but the sections of the bars can turn

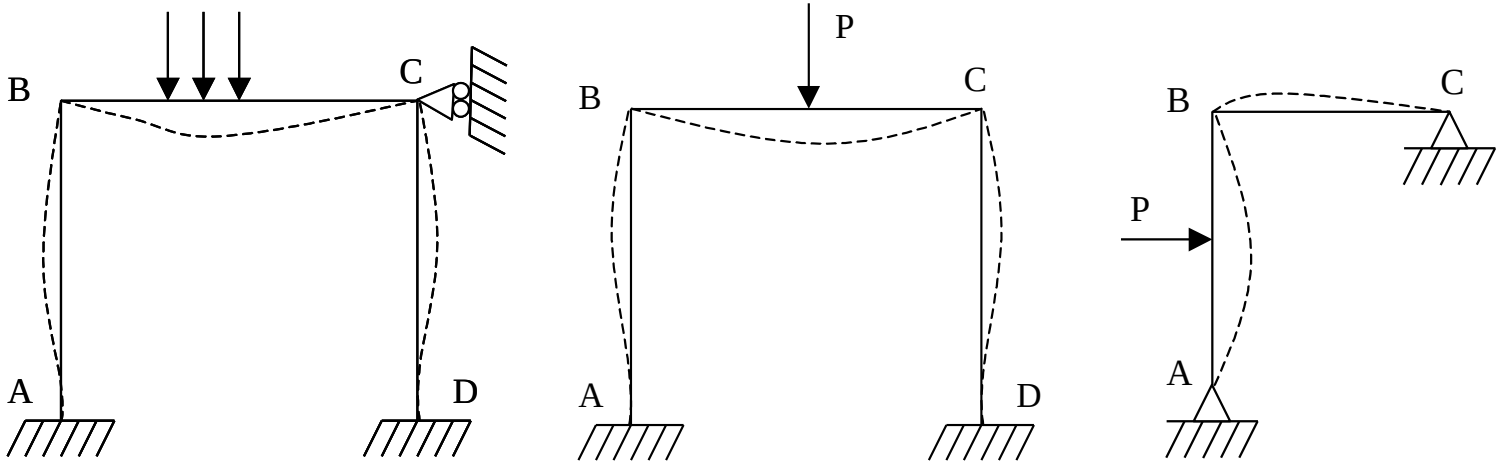

Authors: Enrique Barbero Pozuelo, José Fernández Sáez, Carlos Santiuste Romero

CC BY NC SA

❑ Non-traslational frames

WHEN A STRUCTURE IS TRASLATIONAL?

The nodes of translational structures the nodes can move, this is considered the unknown of the problem

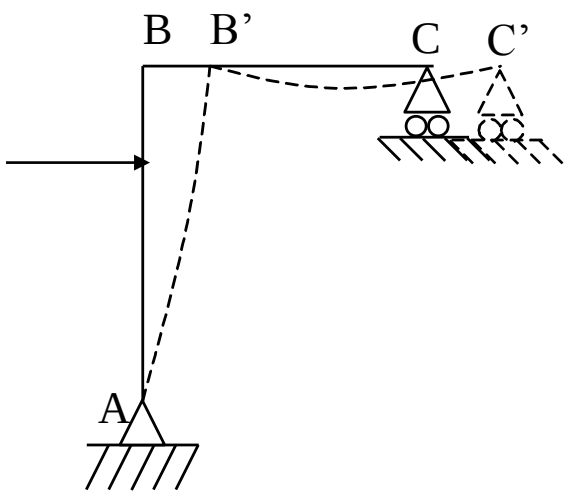

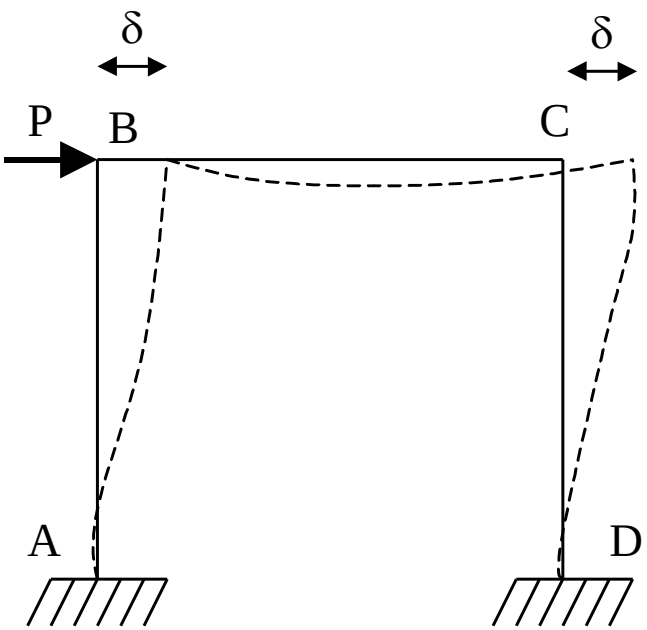

Authors: Enrique Barbero Pozuelo, José Fernández Sáez, Carlos Santiuste Romero

❑ Non-traslational frames

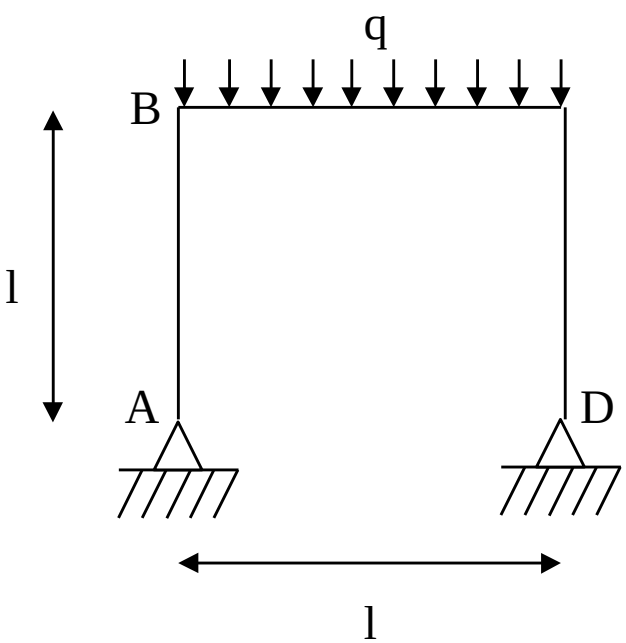

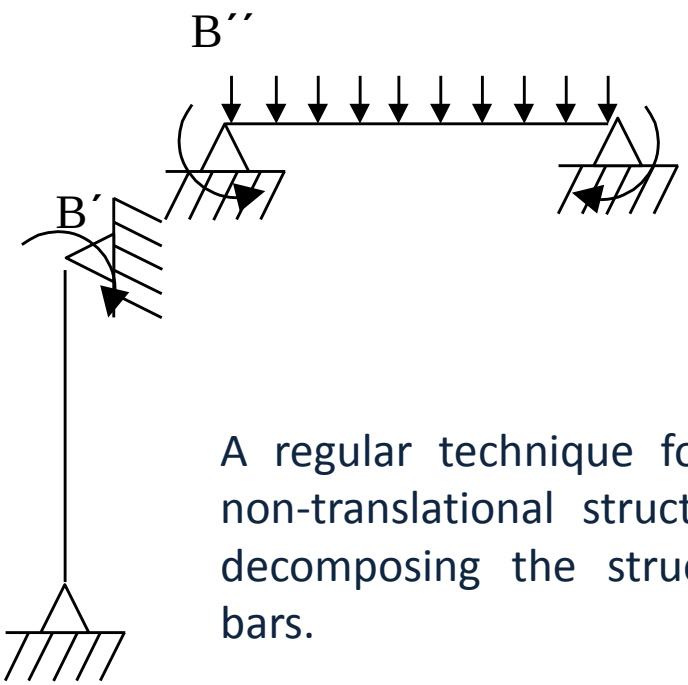

A regular technique for calculation of non-translational structures consist on decomposing the structure in several bars.

Authors: Enrique Barbero Pozuelo, José Fernández Sáez, Carlos Santiuste Romero

❑ Non-traslational frames

The bars, after the decomposition of the structure, must be constrained at their ends via supports.

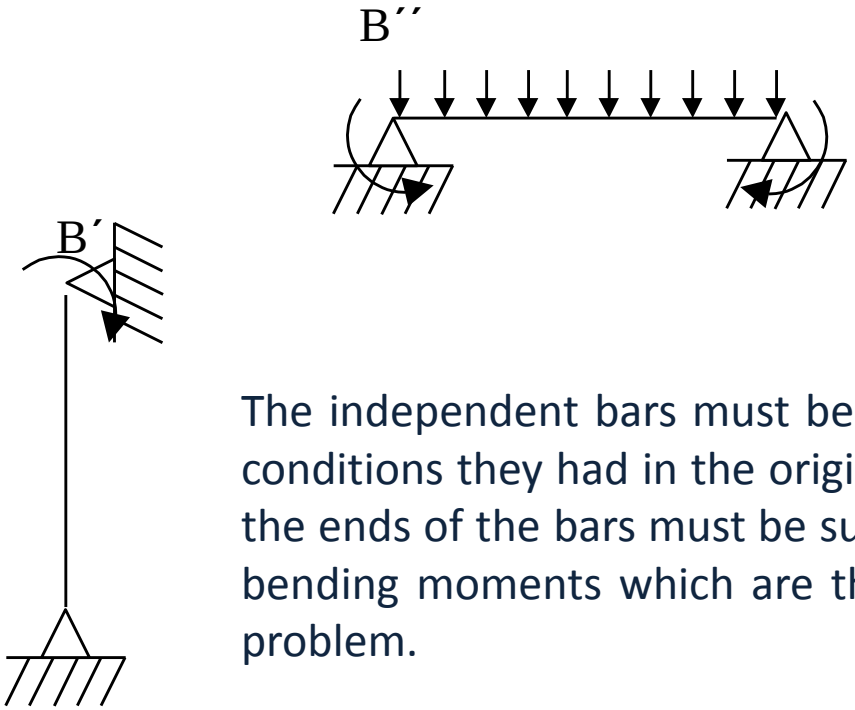

The independent bars must be subjected to same conditions they had in the original structure. Thus, the ends of the bars must be subjected to external bending moments which are the unknown of the problem.

The compatibility condition is “rotations of the end sections of bars that converge at a node must be identical»

Authors: Enrique Barbero Pozuelo, José Fernández Sáez, Carlos Santiuste Romero

Non-traslational frames

Example

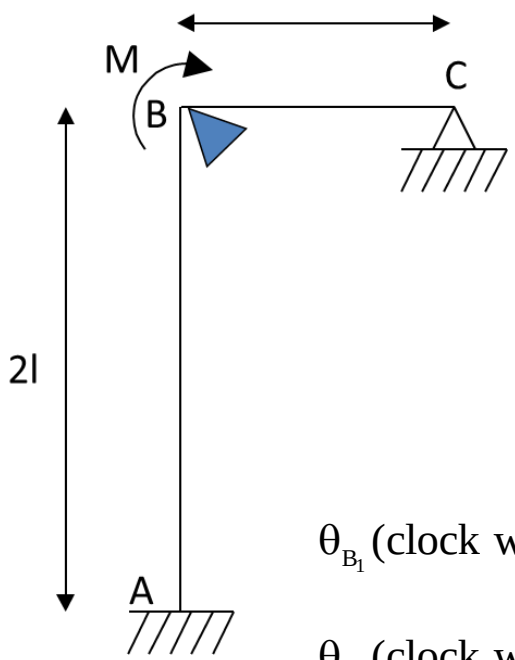

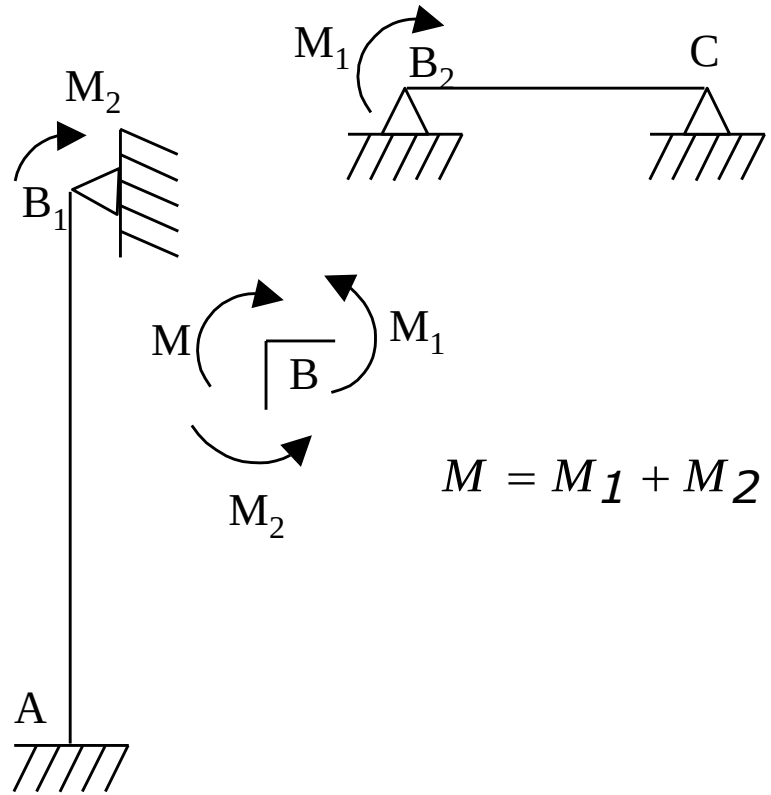

$$M = M_1 + M_2$$

$$\theta_{B_1}(\text{clock wise}) = \theta_{B_2}(\text{clock wise})$$

$$\theta_{B_1}(\text{clock wise}) = \frac{M_2(2l)^2}{4EI(2l)} = \frac{M_2 l}{2EI}$$

$$\theta_{B_2}(\text{clock wise}) = \frac{M_1 l}{3EI}$$

$$M_2 = \frac{2}{5}M \qquad M_1 = \frac{3}{5}M$$

Authors: Enrique Barbero Pozuelo, José Fernández Sáez, Carlos Santiuste Romero

CC BY NC SA

❑ Non-traslational frames

Example

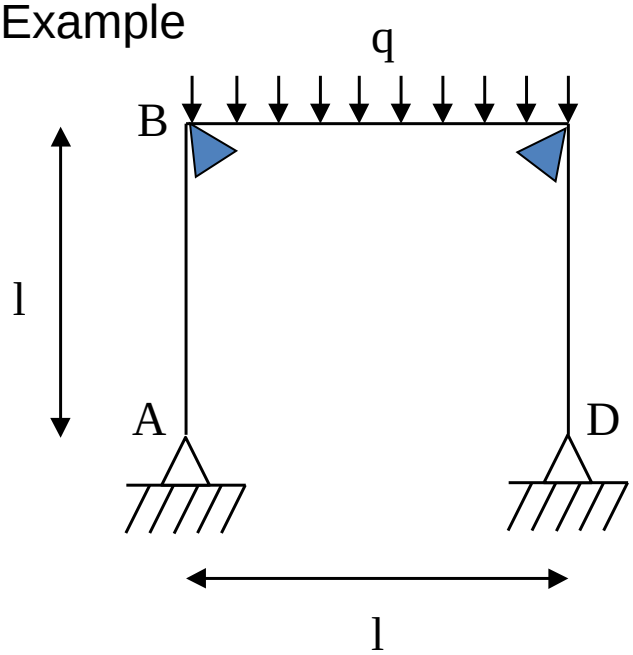

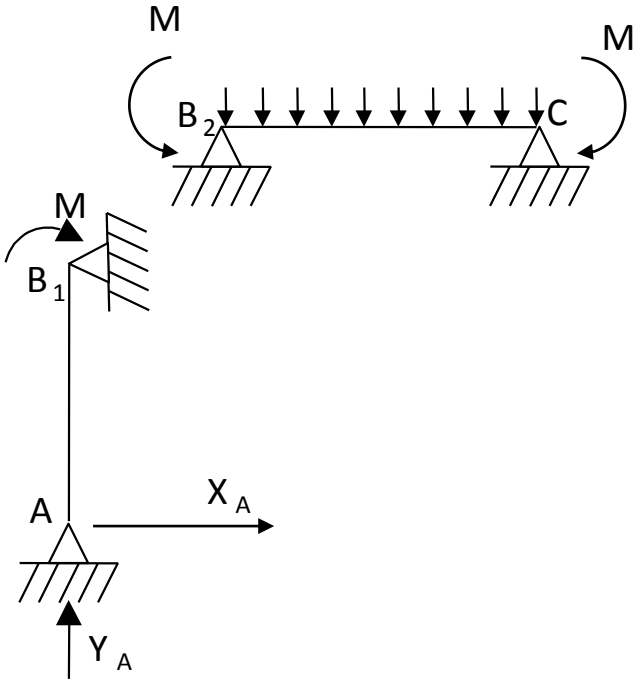

$$\theta_{B_1}(\text{clock wise}) = \theta_{B_2}(\text{clock wise})$$

$$\theta_{B_1}(\text{clock wise}) = \frac{Ml}{3EI}$$

$$\theta_{B_2}(\text{clock wise}) = \frac{ql^3}{24EI} - \frac{Ml}{3EI} - \frac{Ml}{6EI}$$

$$M = \frac{ql^2}{20}$$

$$Y_A = \frac{ql}{2} \qquad X_A = \frac{ql}{20}$$

Authors: Enrique Barbero Pozuelo, José Fernández Sáez, Carlos Santiuste Romero

CC BY NC SA

❑ Non-traslational frames

Example

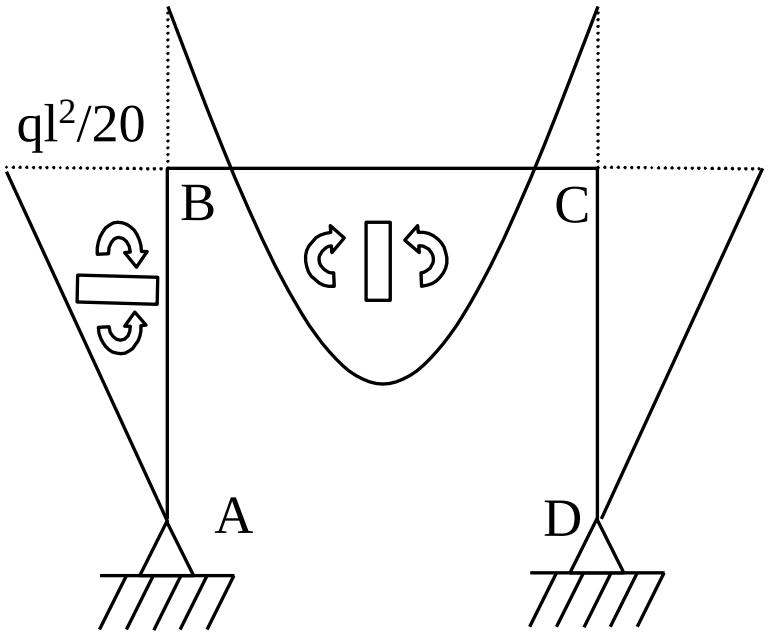

Bending moments law

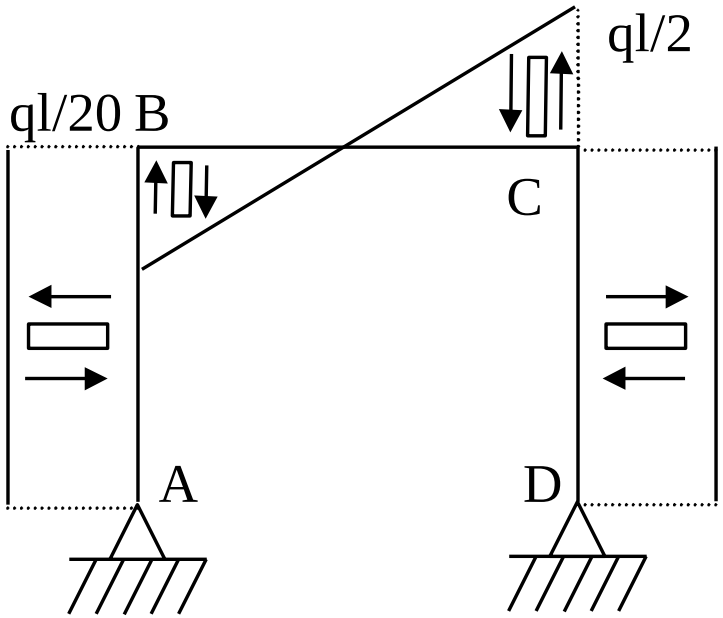

Internal shear forces law

Node equilibrium!

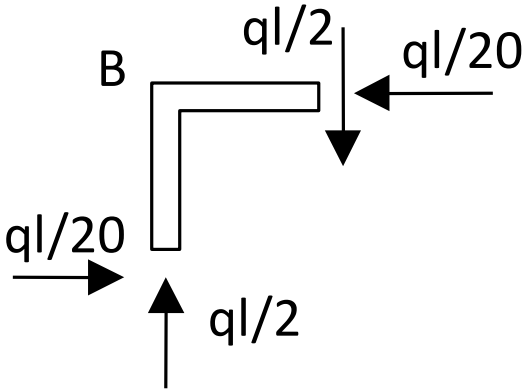

Authors: Enrique Barbero Pozuelo, José Fernández Sáez, Carlos Santiuste Romero

CC BY NC SA

Lattice structures

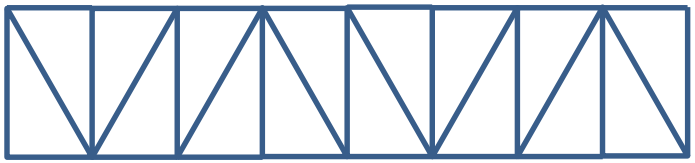

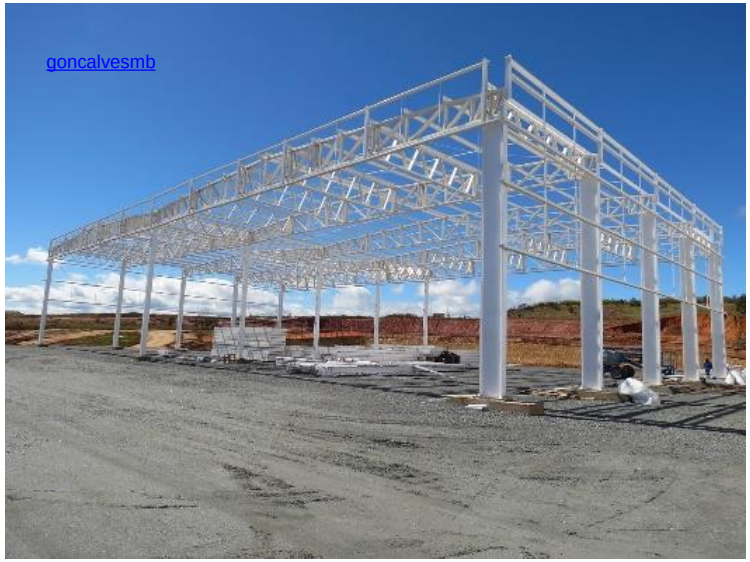

https://commons.wikimedia.org/wiki/Category:Hangars#/media/File:Hangaretes_do_Projeto_32_-_Foto_Set_2014.jpg

Nyttend

https://commons.wikimedia.org/wiki/File:Deep_Cut_Road_bridge_over_canal.jpg?uselang=es

De Uncredited. Original uploader was Mdnavman at en.wikipedia - http://www.flyingboats.ca/FlyingBoats-old/italy/italy.html - Transferred from en.wikipedia to Commons by User:EH101 using CommonsHelper., Dominio público, https://commons.wikimedia.org/w/index.php?curid=15112301

Authors: Enrique Barbero Pozuelo, José Fernández Sáez, Carlos Santiuste Romero

CC BY NC SA

Lattice structures

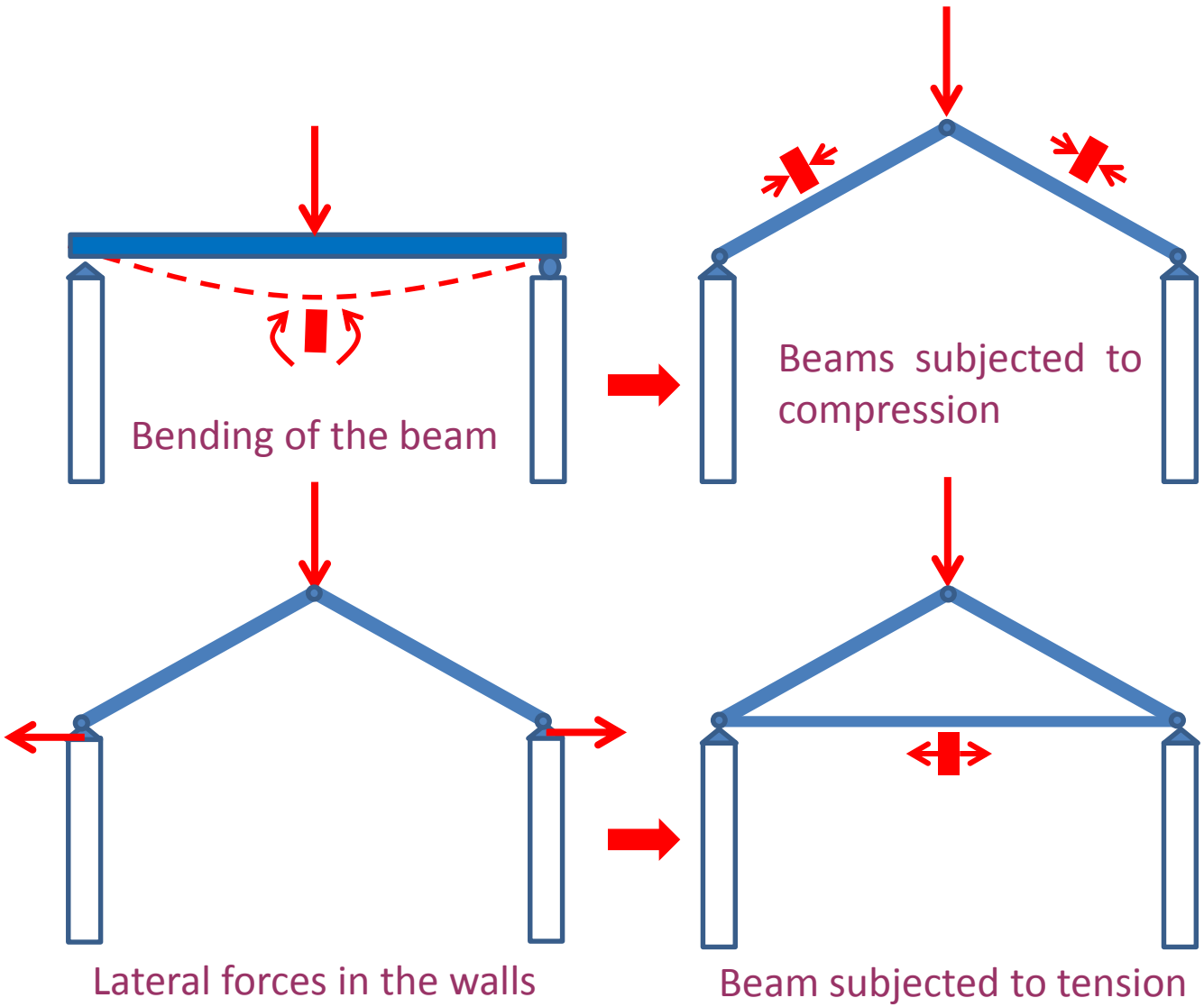

Authors: Enrique Barbero Pozuelo, José Fernández Sáez, Carlos Santiuste Romero

CC BY NC SA

Lattice structures

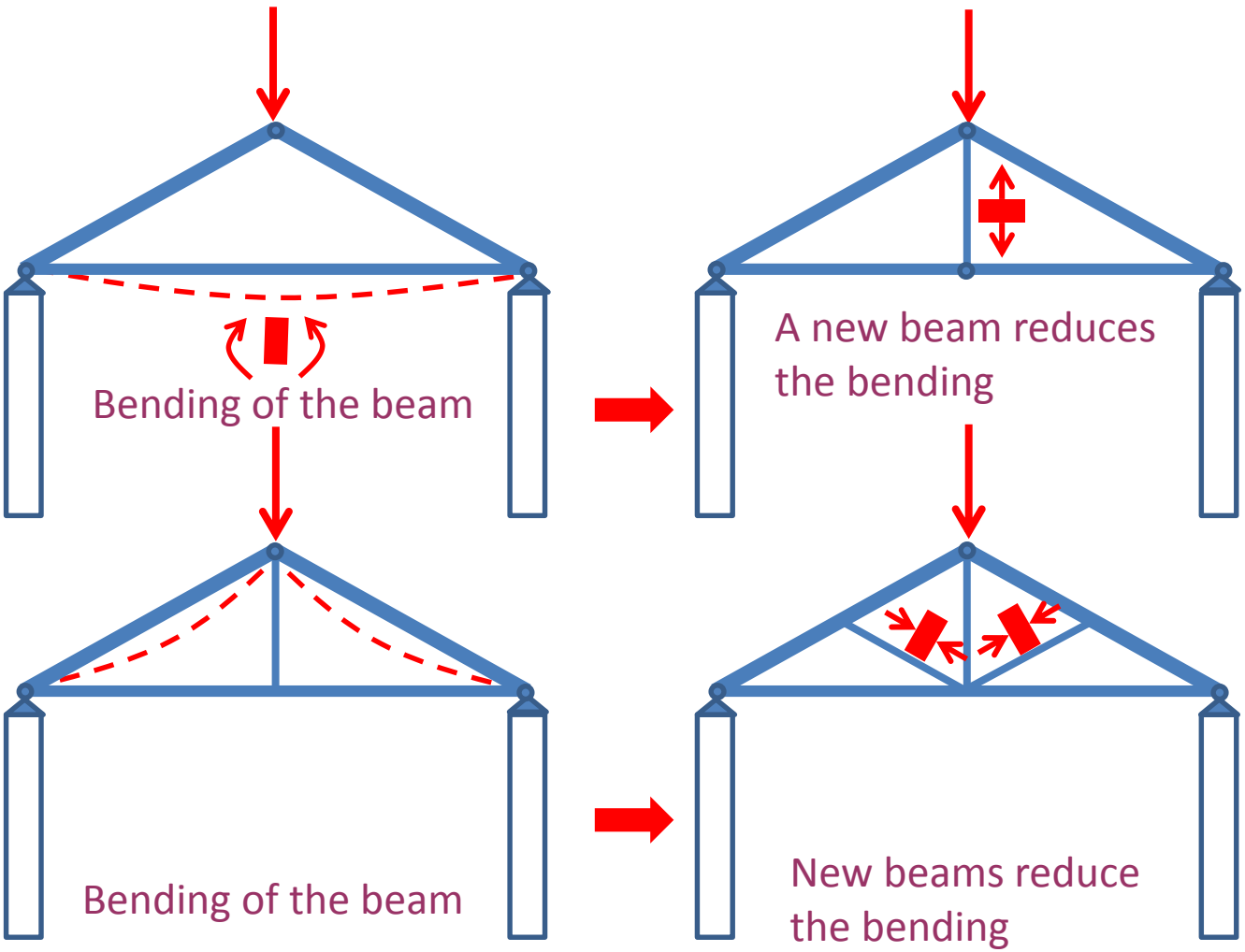

Authors: Enrique Barbero Pozuelo, José Fernández Sáez, Carlos Santiuste Romero

CC BY NC SA

Lattice structures

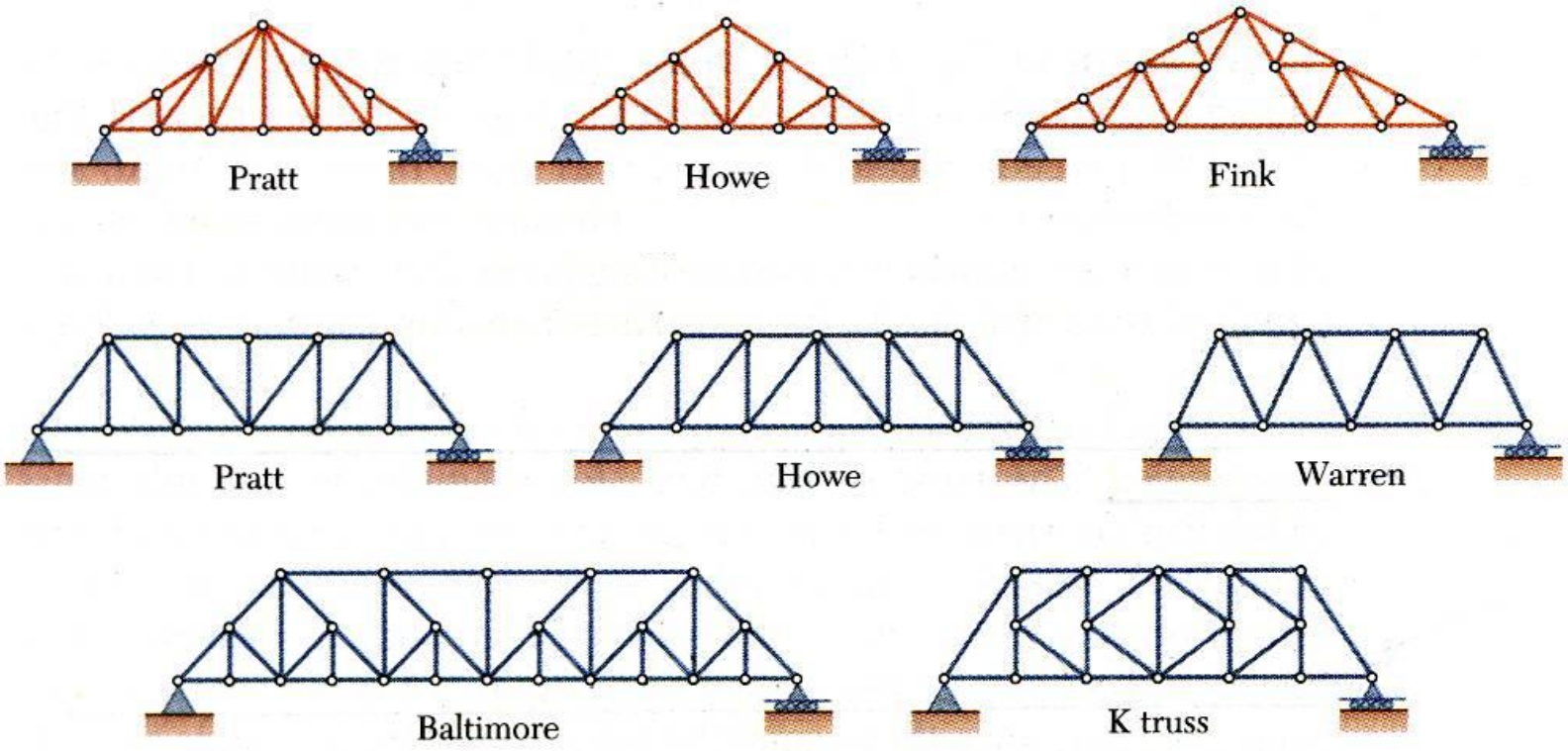

Authors: Enrique Barbero Pozuelo, José Fernández Sáez, Carlos Santiuste Romero

CC BY NC SA

Example

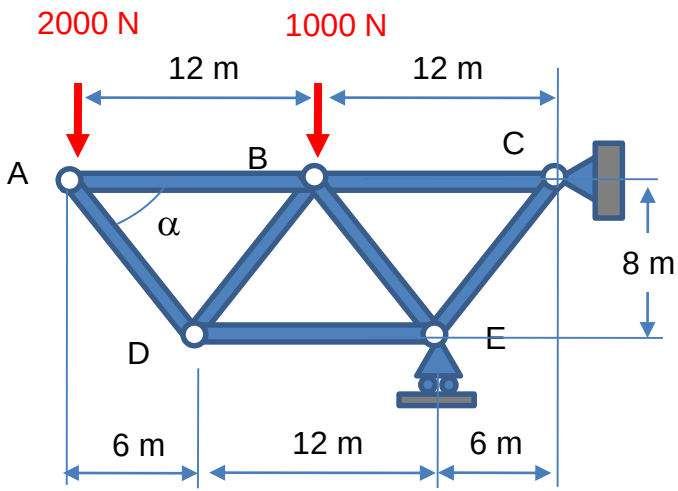

$$\sum M_C = 0 = 2000 \cdot 24 + 1000 \cdot 12 - V_E \cdot 6$$

$$\boxed{V_E = 10 \ kN \uparrow}$$

$$\sum F_x = 0 = H_C \qquad \boxed{H_C = 0}$$

$$\sum F_y = 0 = -2000 - 1000 + V_E + V_C$$

$$\boxed{V_C = 7 \ kN \downarrow}$$

Authors: Enrique Barbero Pozuelo, José Fernández Sáez, Carlos Santiuste Romero

CC BY NC SA

Example

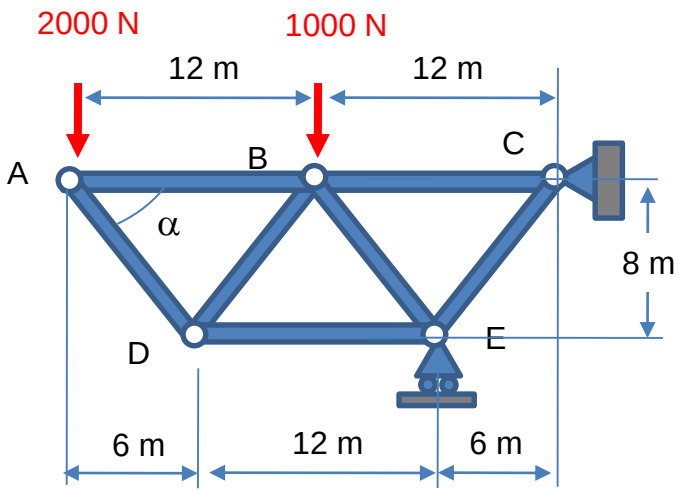

- Node A is subjected to only two unknown forces: applying equilibrium of forces in the node.

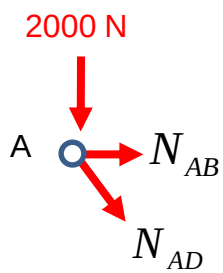

$$\sum F_y = 0 = 2000 + N_{AD} sen(\alpha)$$

$$\sum F_x = 0 = N_{AB} + N_{AD}\cos(\alpha)$$

$$\boxed{N_{AB} = 1500\ N} \quad \boxed{N_{AD} = -2500\ \mathrm{N}}$$

Authors: Enrique Barbero Pozuelo, José Fernández Sáez, Carlos Santiuste Romero

Example

- Successively, the equilibrium of nodes D, B and E can be made.

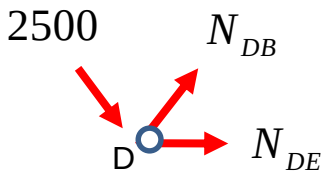

$$\sum F_y = 0 = -2500 sen(\alpha) + N_{DB} sen(\alpha)$$

$$\sum F_x = 0 = 2500 \cos(\alpha) + N_{DB} \cos(\alpha) N_{DB} + N_{DE}$$

$$N_{DB} = 2500 \ N$$

$$N_{DE} = -3000 \ N$$

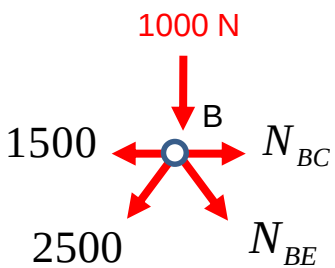

$$\sum F_y = 0 = 1000 + (2500 + N_{BE}) sen(\alpha)$$

$$\sum F_x = 0 = N_{BC} + (N_{BE} - 2500) \cos(\alpha) - 1500$$

$$N_{BE} = -3750 \ N$$

$$N_{BC} = 5250 \ N$$

Lattice structures

Example

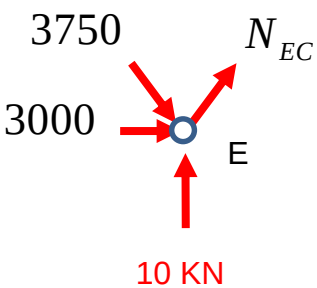

$$\sum F_x = 0 = (N_{EC} + 3750)\cos(\alpha) + 3000$$

$$\boxed{N_{EC} = -8750 \text{ N}}$$

- All internal forces and reactions in C are known. The equilibrium in node C can be used to check the calculus.

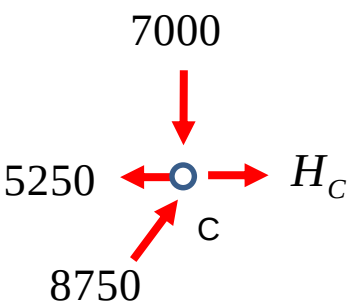

$$\sum F_x = -5250 + 8750\cos(\alpha) = 0 \quad (\text{comprobado})$$

$$\sum F_y = -7000 + 8750 sen(\alpha) = 0 \quad (\text{comprobado})$$

Authors: Enrique Barbero Pozuelo, José Fernández Sáez, Carlos Santiuste Romero